www.SSAC.com
...your timer & flasher specialists

SSAC Product Line Conversion Notification March 28, 2005

HRD9 Series Part Numbers

Important Differences Between Product Designs		
Specifications	**Pre 2005 Design**	**2005 Generation II Design**
Time Delay		
Range	0.2 s ... 100 m in 5 adjustable ranges or fixed	0.1 s ... 100 m in 5 adjustable ranges or fixed
Repeat Accuracy	+/–0.5 %	+/-0.5% or 20 ms, whichever is greater
Tolerance (Factory Calibration)	+/–1%, +/–10%	+/–1%, +/–5%
Reset Time	≤ 500 ms	≤ 150 ms
RT Values (for external adjustment)	0-1 MΩ.	0-100 KΩ. (see note)
Input		
Tolerance	12 VDC, 24VAC/DC: -15% … +20% 120 & 230VAC: -20%…+10%	12 VDC, 24VDC: -15% … +20% 24 … 230 VAC: -20% … +10%
Output		
Form	Single pole, normally open, non-isolated	SPDT Isolated
Contact Ratings @ 125 VAC	General purpose; UL: 15A, CSA: 30A Motor load; UL: 1HP, CSA: 1HP	**SPDT-N.O. SPDT-N.O.** General Purpose 125/240 VAC 30 A 15 A
240 VAC	General purpose; UL: 10A, CSA: 10A Motor load; UL: 1HP, CSA: 1HP	Resistive 125/240 V AC 30 A 15 A 28 V DC 20 A 10 A
30 VDC	Resistive; UL: 20A, CSA: 20A	Motor Load 125 V AC 1 hp* ¼ hp** 240 V AC 2 hp** 1 hp**
Life	Mechanical -- 1 x 10^6, Electrical -- 1 x 10^5	Mechanical -- 1 x 10^6; Electrical -- 1 x 10^5, *3 x 10^4, **6,000
Mechanical		
Mechanical		Terminal layout is different.
Connection		Terminal connections are different.
Environmental		
Operating Temperature	-20°C ... +60°C	-40°C ... +60°C

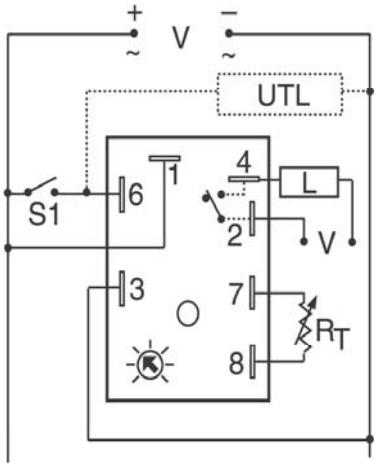

Pre 2005 Design

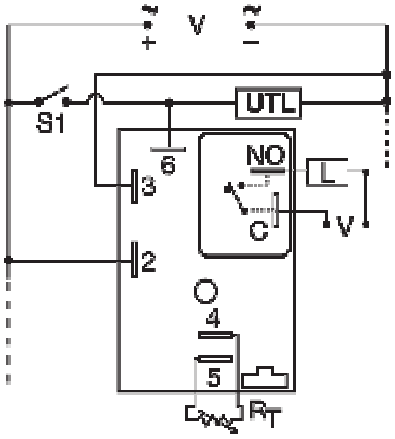

2005 Generation II Design

Legend
V = Input Voltage
L = Timed delayed load
RT = External Adjustment Potentiometer
UTL = Optional Untimed Load
S1 = Initiate Switch
Dashed lines are internal connections

Note: 1.) VTP plug-on adjustment modules cannot be used with the 2005 Generation Design. An onboard adjustment option is available.
2.) The RT Value cannot exceed 100 k ohms. If the RT exceeds 200k ohms erratic timing may occur. This is normal and not an indication of a defective unit.

SSAC, PO Box 1000, Baldwinsville, NY 13027; Technical Help 800-377-7722; Fax 315-638-0333